HX5100

ELECTRONIC PHASE SHIFTER

SUMMARY

The HX5100 Series Electronic Phase Shifters are sold in pairs and are designed to be used with the Holzworth HA7000 Series Phase Noise Analyzers. These phase shifters are frequency specific and allow for full automation of additive/residual phase noise measurements with the Holzworth test systems while maintaining the ANSI z540 calibration.

SPECIFICATIONS [1]

PARAMETER	MIN	TYP	MAX	UNITS	COMMENTS
Input Frequency Range	One octave. Refer to part number guide below.				
Input Power Range	4	7	10	dBm	50Ω
Output Power	6	8	10	dBm	50Ω
Phase Shift Range	0		>190	deg	50Ω
Phase Noise (Additive)				dBc/Hz	Input Referred, 10kHz offset
DC Control Voltage	0		10	V_{DC}	
Input RF Connector	SMA Plug (male)				
Output RF Connector	SMA Jack (female)				
DC Connector	SMA Jack (female)				
Housing Dimensions (LxWxH)	2” x 1.625” x 0.5” (50.8mm x 41.3mm x 12.7mm)				

[1] Specifications are subject to change per the discretion of Holzworth Instrumentation, Inc.

PART NUMBER GUIDE [2]

PART NUMBER	FREQUENCY (f_c)	BANDWIDTH	PHASE SHIFT RANGE
HX5100-17M	17MHz	10MHz - 23MHz	0 to >190 deg
HX5100-35M	35MHz	23MHz - 47MHz	0 to >190 deg
HX5100-70M	70MHz	47MHz - 94MHz	0 to >190 deg
HX5100-140M	140MHz	94MHz - 187MHz	0 to >190 deg
HX5100-280M	280MHz	187MHz - 375MHz	0 to >190 deg
HX5100-500M	500MHz	375MHz – 750MHz	0 to >190 deg
HX5100-1000M	1GHz	750MHz – 1.5GHz	0 to >190 deg
HX5100-2250M	2.25GHz	1.5GHz – 3GHz	0 to >190 deg
HX5100-4500M	4.5GHz	3GHz – 6GHz	0 to >190 deg
HX5100-x	Customer Defined	one octave	0 to >190 deg

[2] Part numbers are subject to change per the discretion of Holzworth Instrumentation, Inc

HX5100 TEST SETUP

Residual (additive) phase noise tests can be fully automated by using 2x Holzworth HX5100 Electronic Phase Shifter modules. Each module design covers approximately one octave within the operating range of the HA7000 Series Phase Noise Analyzers. Each matched pair of phase shifters are fully controlled by the HA7000 Series analyzer for full automation of achieving test system quadrature. This simplifies the measurement process and offers an incredible time saving advantage in manufacturing test, full ATE tests and even in the laboratory.

With the HX5100 Phase Shifters integrated into a basic test setup as shown below, the system will automatically set proper quadrature, calibrate and acquire the data.

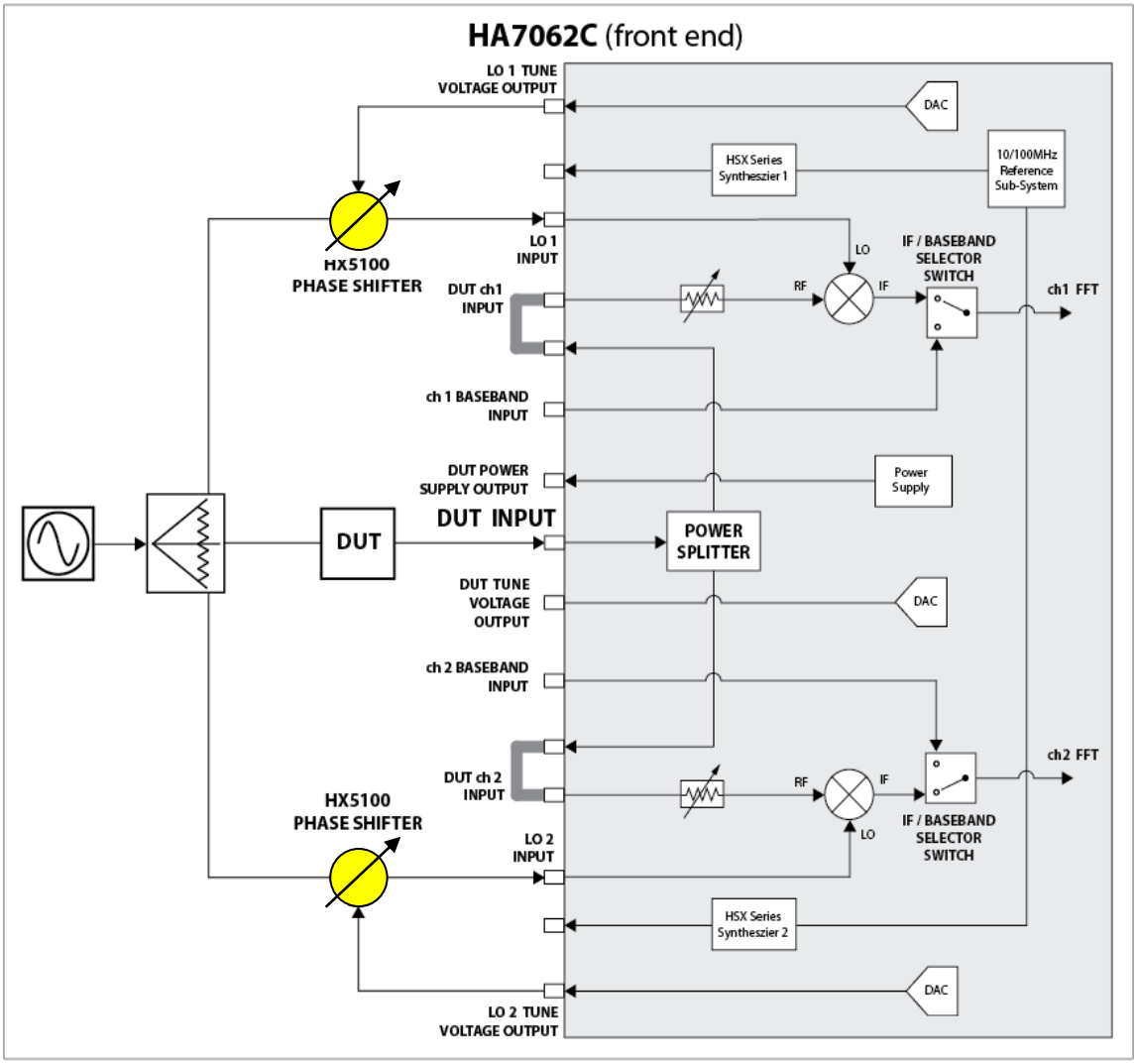

The example shown here is for an HA7062C Real Time Phase Noise Analyzer. The HX5100 Series can also be used with an HA7402C Real Time Phase Noise Analyzer Engine as well as the entire HA7000B Series of Phase Noise Analyzers.

HX5100 PERFORMANCE DATA

The plots contained here demonstrate the typical performance of part number: HX5100-500M. In this case the electronic phase shifter has a center frequency of 500MHz with an overall operational bandwidth of 375MHz to 750MHz.

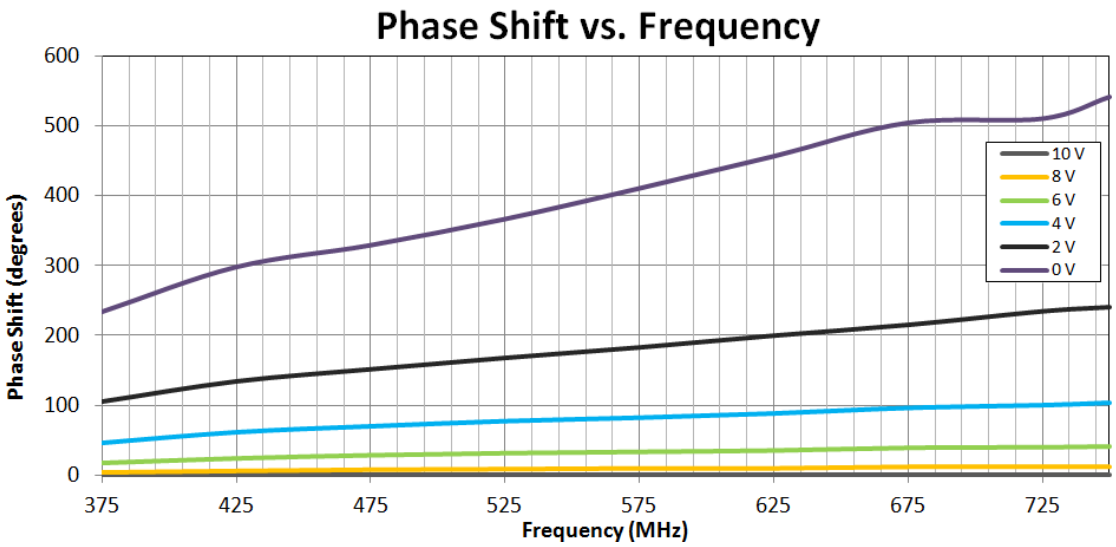

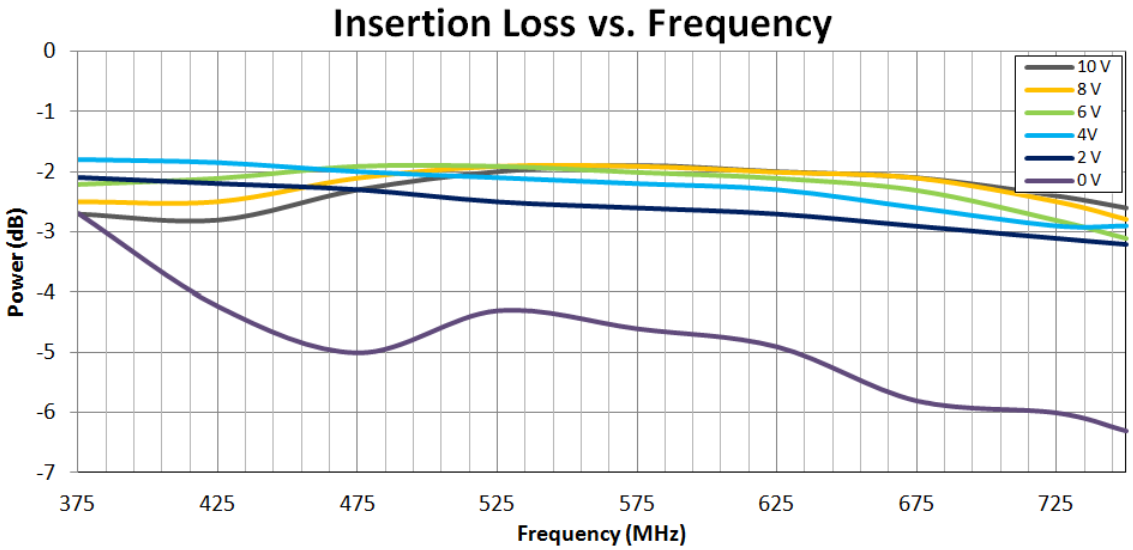

ANSI Z540 CALIBRATED

2 YEAR WARRANTY